# ASCENT GOGGLES

## Quick Start Guide

V1.0

## Introduction

This product is a wireless image transmission head-mounted display device, compatible with Ascent HD System series air unit products, and can achieve long-distance, low-latency, high-definition wireless image transmission. In the document, the terms VTX, Air unit, etc. refer to Ascent image transmission camera products. In the document, the terms VRX, Goggles, etc. refer to Ascent image transmission display products.

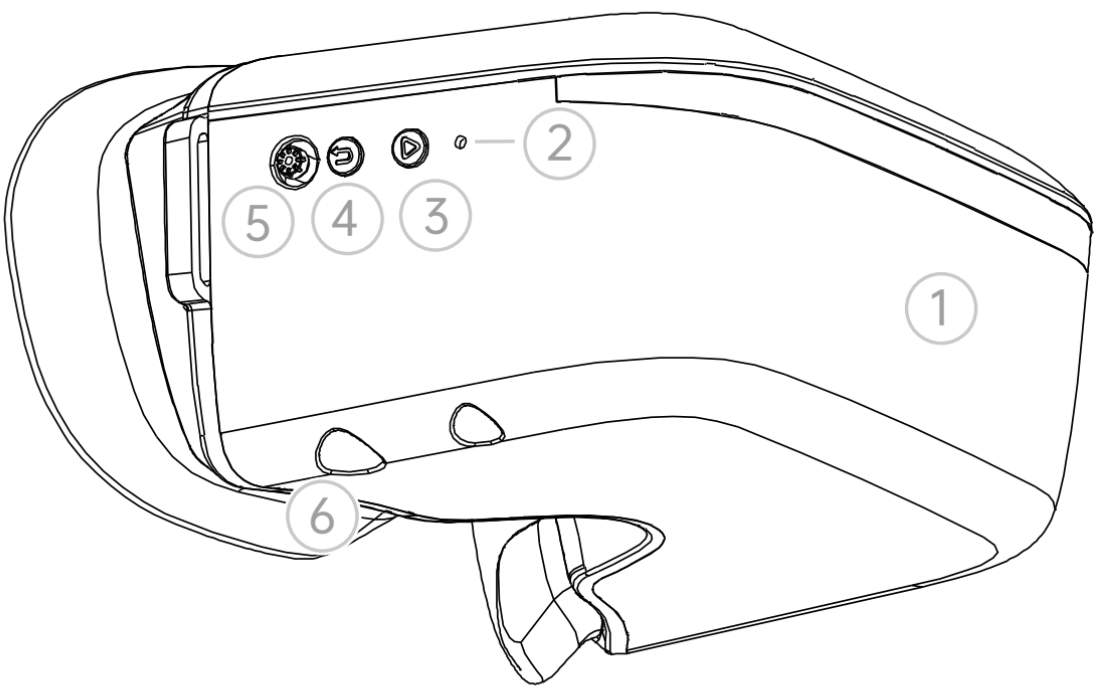

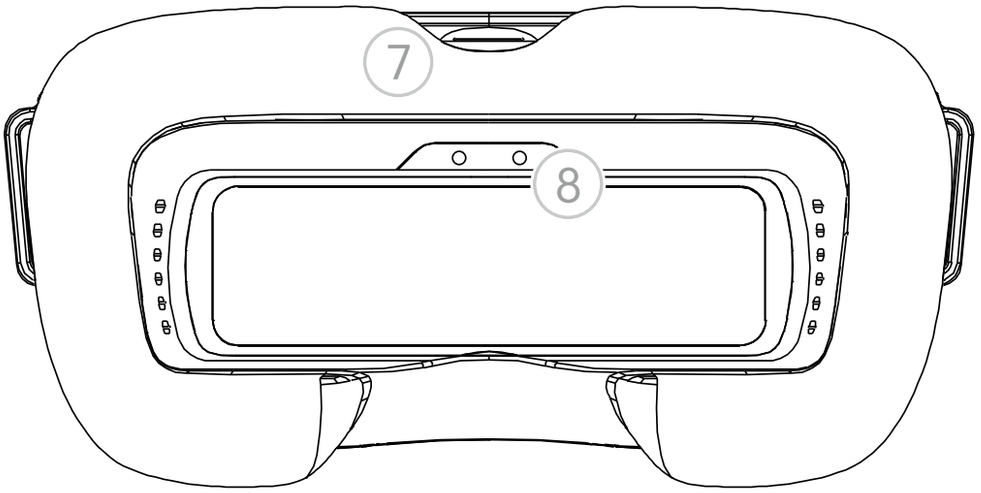


1: Built-in Antenna
2: Link Button
(Short press to enter the linking state, long press for 8 seconds to enter the upgrade state)
3: Record Button
(Press to start or stop video recording)
4: Back Button
(Press to return to the previous menu or exit the current mode)
5: 5D Button
(Toggle the button to scroll through the menu. Press the button to confirm)
6: Power Port
(Voltage range: 6V-25.2V, DC 5.5*2.1)
7: Micro SD Card Slot
8: Frame Mounting Holed

# Linking

1. Connect the VTX and the power of the Goggles.
2. Press the link button of the VTX and Goggles respectively (as shown in the picture), when the VTX enters the pairing state The indicator light turns red, and the Goggles end is a DI... DI... DI...
3. After the link is successful, the indicator light on the VTX turns solid green, the beeping sound on the Goggles stops and the screen is displayed.

# Upgrade

Please go to the official website to download the upgrade firmware, Ascent_L_Gnd_X_X_X.img is the Goggles file, copy it to the SD card, be careful not to change the file name.

1. Copy the upgrade file to the root directory of the SD card, connect to the power supply and wait for the device to initialize (delete the old firmware file first if there in one).
2. Press and hold the link button on the Goggles for 8 seconds, and the Goggles automatically restart and emit a beep...beep...beeper sound. (Do not power off during the upgrade process, the upgrade time on the goggle is about 1 minutes)
3. After the upgrade is successful,and the beeping sound stops after the Goggles beeps for 5 seconds.

# Status indication

| Goggles Buzzer Status | |
|---|---|
| Link state | DI.... DI.... DI.... DI.... |
| Upgrade firmware | DI..... DI..... DI..... DI—— |
| Upgrade failed<br>(No SD card or firmware detected) | DI.. DI.. DI.. DI.. |
| Boot failure<br>(Reboot or re-upgrade) | DI.. DI..... DI.. DI..... |

# Precautions

1. This is a sophisticated product. Failure to operate this product in a safe and responsible manner could result in injury or damage to the product or other property. It must be operated with caution and common sense and requires some basic mechanical knowledge.
2. The transmit power of VTX and Goggles is only 10mW when the standby mode is on.
3. There are up to three channels for the goggles depending on the region. Bandwidth of 10MHz and 20MHz.
4. It is recommended to upgrade VTX and Goggles to the latest firmware before first use.

# Operating channel

| Central frequency(MHz) | Channel1 | Channel2 | Channel3 |
|---|---|---|---|
| FCC | 5740 | 5770 | 5805 |
| CE/SRRC | 5740 | 5770 | 5805 |

Make sure you fully understand and abide by local laws and regulations before using this product. Users who use the amateur frequency bands with a modified or cracked version or without a license may be punished for breaking local laws or regulations.

# FCC Warning

This device complies with Part 15 of the FCC Rules. Operation is subject to the following two conditions: (1) This device may not cause harmful interference, and (2) This device must accept any interference received, including interference that may cause undesired operation. Changes or modifications not expressly approved by the party responsible for compliance could void the user's authority to operate the equipment.

Note: This equipment has been tested and found to comply with the limits for a Class B digital device, pursuant to Part 15 of the FCC Rules. These limits are designed to provide reasonable protection against harmful interference in a residential installation. This equipment generates, uses, and can radiate radio frequency energy. If not installed and used in accordance with the instructions, it may cause harmful interference to radio communications. However, there is no guarantee that interference will not occur in a particular installation. If this equipment does cause harmful interference to radio or television reception, which can be determined by turning the equipment off and on, the user is encouraged to try to correct the interference by one or more of the following measures:

- Reorient or relocate the receiving antenna.
- Increase the separation between the equipment and receiver.
- Connect the equipment to an outlet on a circuit different from that to which the receiver is connected.
- Consult the dealer or an experienced radio/TV technician for help.

**Specific Absorption Rate (SAR) Information:**

This Ascent Goggles complies with government requirements for exposure to radio waves. The guidelines are based on standards developed by independent scientific organizations through regular and thorough evaluation of scientific studies. These standards include a substantial safety margin designed to ensure the safety of all individuals, regardless of age and health.

**FCC RF Exposure Information and Statement:**
The SAR limit set by the FCC is 1.6 W/kg, averaged over one gram of body tissue, and 4.0 W/kg averaged over 10 grams for extremities. Device type: WN02-FPL006 (FCC ID: ) has also been tested for compliance with these SAR limits. During product certification, the highest reported SAR value was 0.612 W/kg for the body, and 0.138W/kg for extremities. This device has been tested for typical body-worn operations with the back of the Goggles kept at 0 mm separation from the body. To maintain compliance with FCC RF exposure requirements, accessories that maintain a 0 mm separation distance between the user's body and the back of the Goggles must be used. Belt clips, holsters, and similar accessories used with this device should not contain metallic components. Accessories not meeting these requirements may not comply with FCC RF exposure requirements and should be avoided.

**Body-Worn Operation:**
This device has been tested for typical body-worn operations. To comply with RF exposure requirements, a minimum separation distance of 0 mm must be maintained between the user's body and the Goggles (including the antenna). Third-party belt clips, holsters, and similar accessories used with this device must not contain any metallic components. Accessories that do not meet these requirements may not comply with RF exposure requirements and should be avoided. Use only the supplied or approved antenna.

# Software interface

## Main interface-1

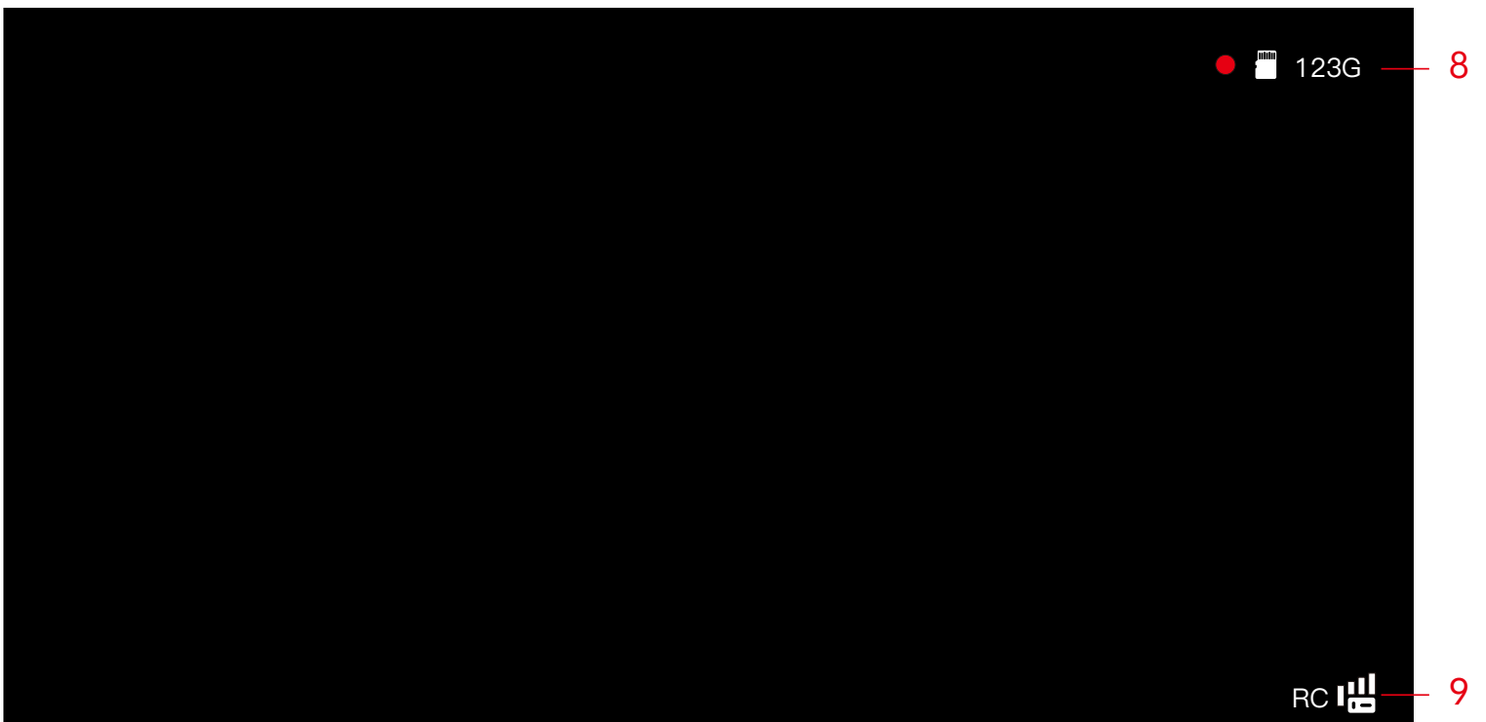

**1–VTX input voltage:**
Detect VTX voltage, intelligently identify the voltage of 2, 3, 4, 6 string LiPo batteries, alarm when a single battery is lower than 3.5V, and alarm in red font when the voltage is too low.

**2–Goggles input voltage:**
Detect Goggles low battery alarm, intelligently identify the voltage of 2, 3, 4, 6 string LiPo batteries, alarm when a single battery is lower than 3.5V, red font and buzzer alarm when the voltage is too low.

**3–Real–time bit rate:**
Display real–time transmission bitrate in Mbps, with 10.0M and 20.0M bandwidth modes.

**4–Time delay:**
Displays the total delay from the transmission of images captured by the VTX camera to the ground end.

**5–Ranging mode:**
The function of calculating the transmission distance from Goggles to VTX according to the wireless transmission delay, the signal is interfered will lead to error amplification。

**6–Status prompt:**
The text prompts information that needs attention in the current state.

**7–Current channel:**
Display the current setting channel, the signal grid has 5 states, 4 grids, 3 grids, 2 grids, 1 grid, and blank.

**8–Goggles SD card status:**
Display the status and remaining capacity of the Goggles SD card. When recording, the red circle flashes to prompt, the status of the SD card not detected is displayed as NO SD, and the status of the memory is full is displayed as –.

**9–Remote Controller Signal Status:**
There are five signal bar states: 4 bars, 3 bars, 2 bars, 1 bar, and no bar. When no remote controller signal is detected by the image transmission module, this icon will be hidden.

# Menu Channel-2

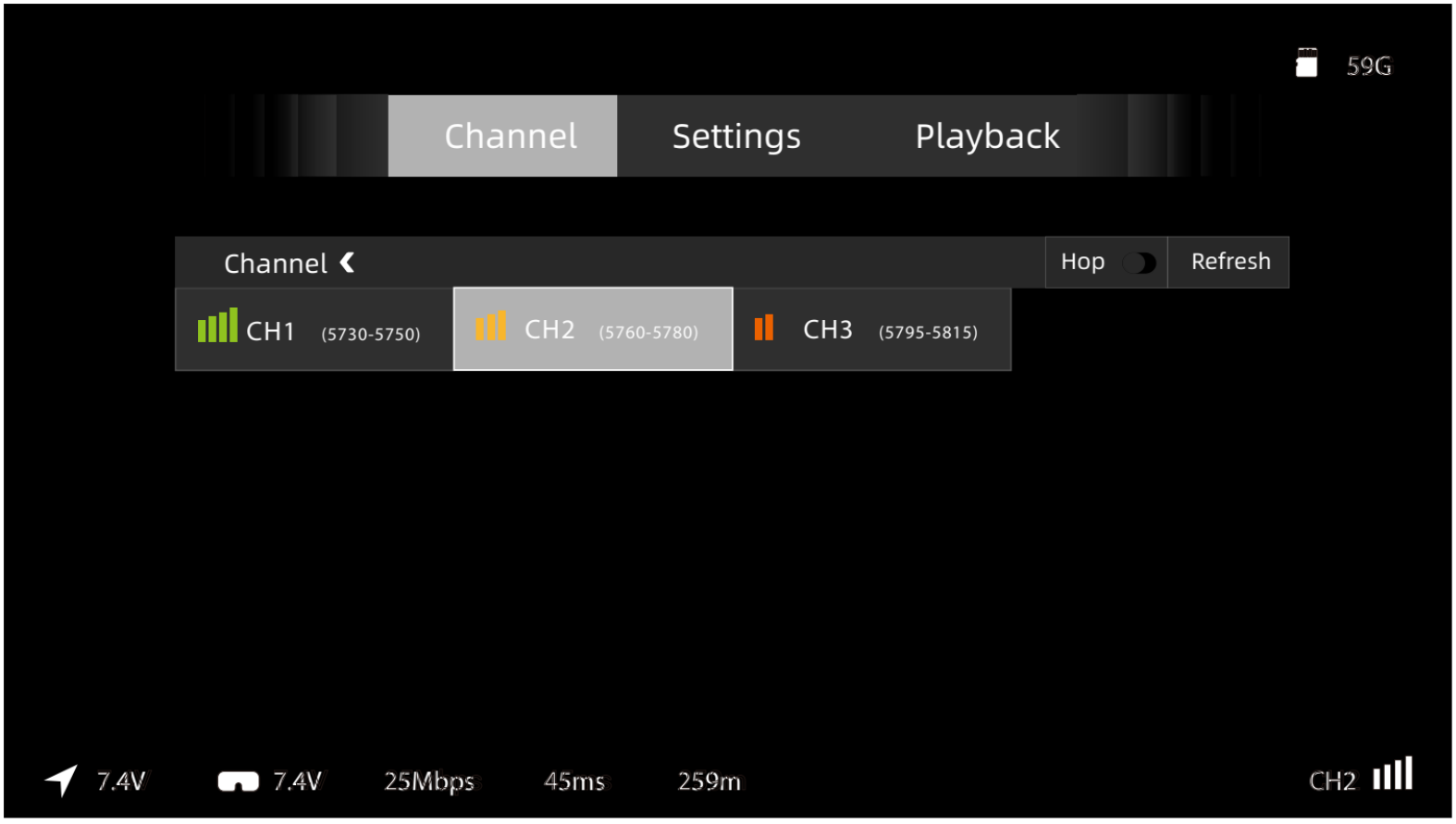


**1-Channel:**
Displays the interference status of each channel. Signal strength is shown as 4 bars, 3 bars, 2 bars, 1 bar, or empty. An empty signal bar indicates the channel is occupied and cannot be selected. A white outline represents the selection box. Press the confirm button to highlight a channel, and the highlighted one is the current channel.

**2-Frequency Hopping:**
When frequency hopping is enabled, the goggles will automatically select the channel with the least interference. Manual channel switching is not available in this mode.

**3-Refresh:**
Click Refresh to re-scan all channels and update their interference status.

# Menu Settings-4

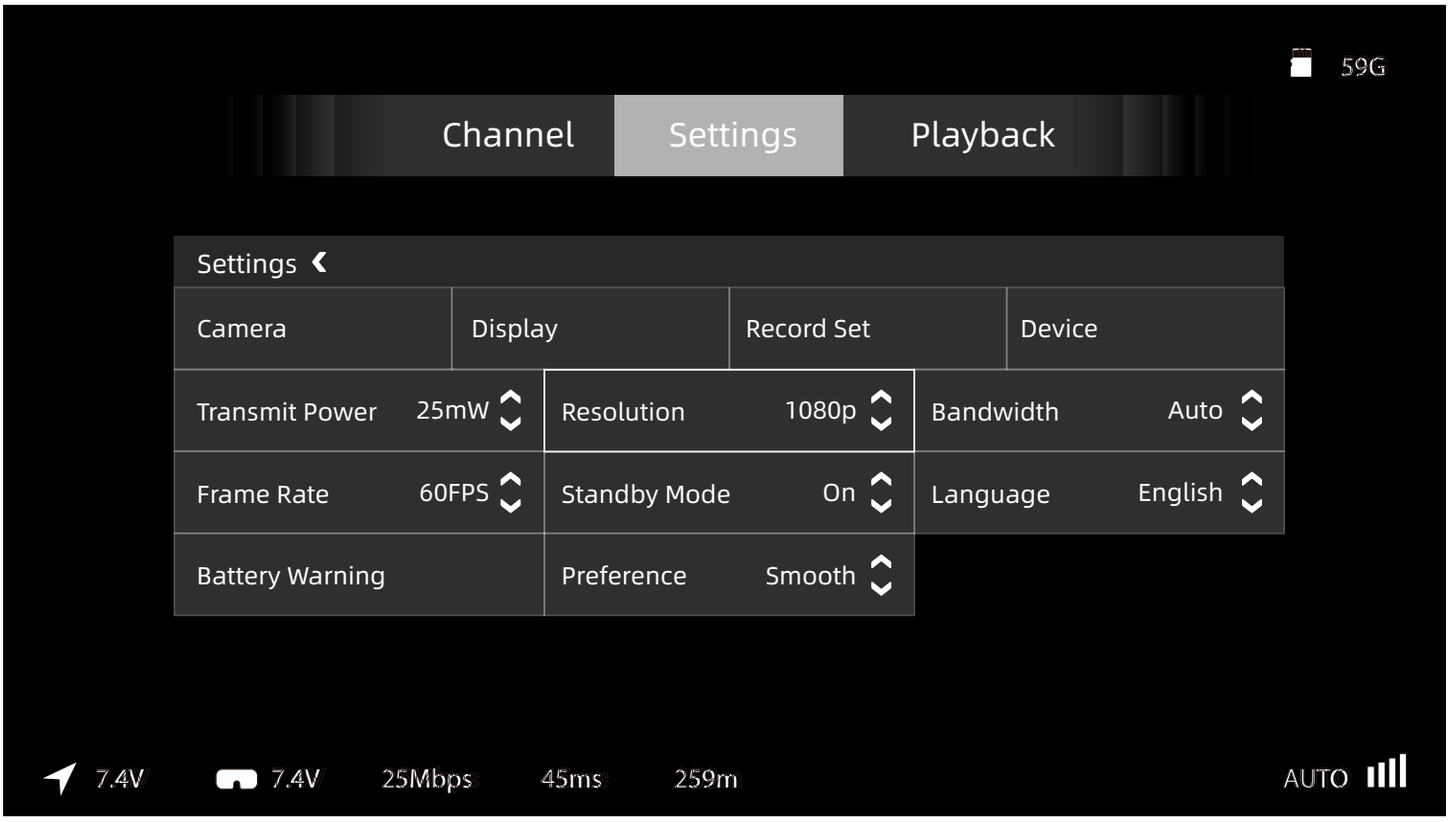


**1–Camera:**
The adjustable contents of the camera are scene preset, EV value, saturation, sharpness, white balance, rotate, ratio, 3D DNR, Shutter, and Max ISOsettings.

**2–Display:**
Display adjustable content is Debug, brightness, focalization mode, custom OSD, OSD position, font upgrade, custom font, viewfinder, viewfinder edit settings.

**3–Refresh set:**
The recording can be adjusted as VTX REC resolution, REC device, take off REC, REC loop, format SD card, format VTX, Built–in EIS, REC Time, REC Format, Color, Saturation, Sharpness.

**4–Device:**
Adjustable settings include Buzzer Volume, Ranging Mode, Signal Loss Alert, Restore Factory Settings, Reset VTX Defaults, Device Information, User Guide, Mode Switching, DVR Bitrate (goggles), and Anti–Flicker.

**5–Transmission Power:**
Default selectable transmission power: 25 mW, 100 mW.

**6–Resolution:**
Selectable resolutions: 720P and 1080P.

**7–Bandwidth:**
Selectable 10.0M and 20.0M options for different image quality. High bitrate is only supported when FCC mode is enabled.

**8–Frame Rate:**
The standard frame rate is equal to 60fps.

**9–Standby Mode:**
In standby mode, both the air unit and goggles transmit at 10 dBm. Transmission power will only return to the configured value after exiting standby mode or turning it off. This function requires the air unit to be properly connected to the flight controller via serial port—when the goggles detect an arming signal from the aircraft, standby mode exits automatically. If no flight controller is supported, this function can be disabled.

**10–Language:**
Language switching English/中文.

**11–Battery Alarm:**
Monitors the low battery status of the goggles. When voltage is too low, a red text warning and buzzer alert will be triggered. This feature can be enabled or disabled.

**12–Preferences:**
Preset transmission modes: Smooth, High Quality, Long Range.

# Menu Playback–5

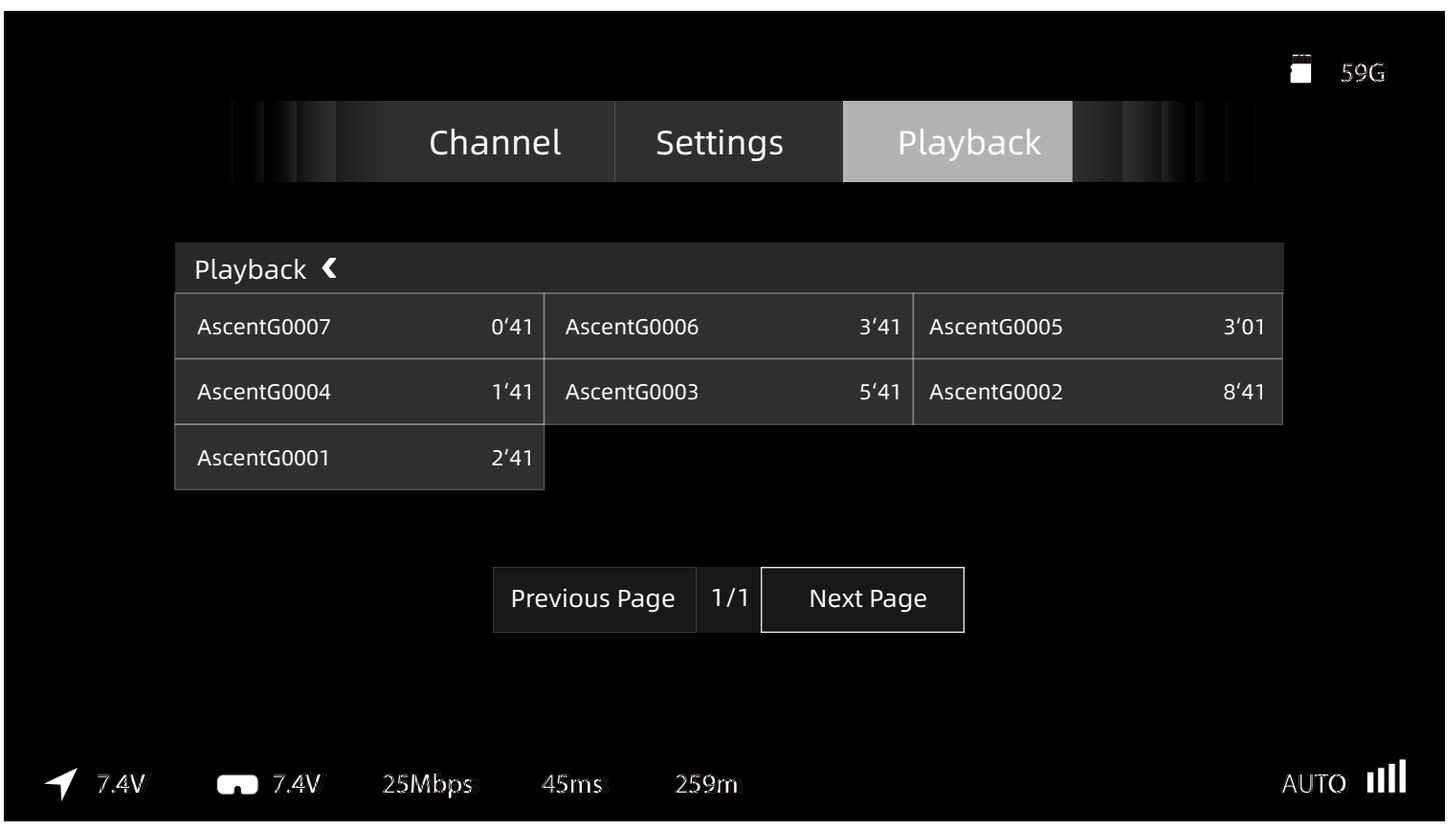


1、The OSD switch can be turned on or off. When it is turned on, the flight control OSD information (if any) and the flight information of the main interface will be superimposed on the playing video interface. When the selection box stays in the video list, press and hold the Goggles confirmation

key to open the multi-selection function, and the menu box will display function settings (delete, select all) , cancel), press the return key again to exit the multi-selection mode.

2、On the playback interface, click the middle button to pause/play, and the left and right arrow keys to adjust rewind/fast forward

# Specifications

| | |
|---|---|
| Name | Ascent Goggles |
| Model | WN02-FP006 |
| Communication Frequency | 5.738.5-5.806.5GHz |
| Transmitter Power(EIRP) | FCC:<20dBm, CE:<14dBm, SRRC:<20dBm |
| I/O Interface | DC5.5*2.1mm, Micro SD Card Slot |
| Transmission Resolution | 1080p60fps, 720p60fps |
| Code Rate | Max 25 Mbps |
| Min. Latency | Average 32ms |
| Average Gain | 4.9dBi |
| Polarization | LHCP |
| Transmission Distance | ＞4km |
| Channel | 3 |
| Screen Resolution | 1920*1080/60Hz |
| Screen Material | LCD |
| Screen Size | 4.5 Inch |
| Power Input | 6V-25.2V(2S-6S) |
| SD card | Support 256G |
| System | Ascent HD system |

CADDXFPV SUPPORT
email: support@caddxfpv.com

# ASCENT GOGGLES

## 快速入门指南

V1.0

## 简介

该产品为无线图像传输头戴显示设备，兼容 Ascent HD System 系列天空端产品，可实现远距离低延时高清无线图像传输，文档中描述：VTX、发射端、天空端等词汇代指 Ascent 图传摄像头端产品，文档中描述：VRX、接收端、眼镜端等词汇代指 Ascent 图传显示端产品。

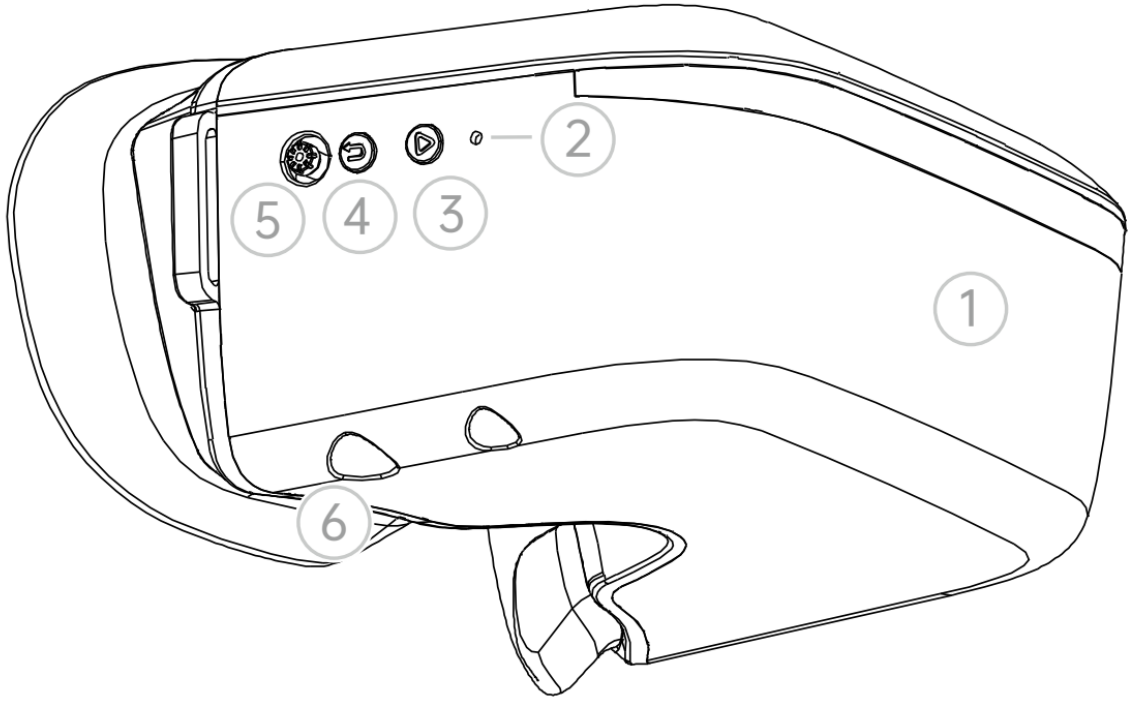

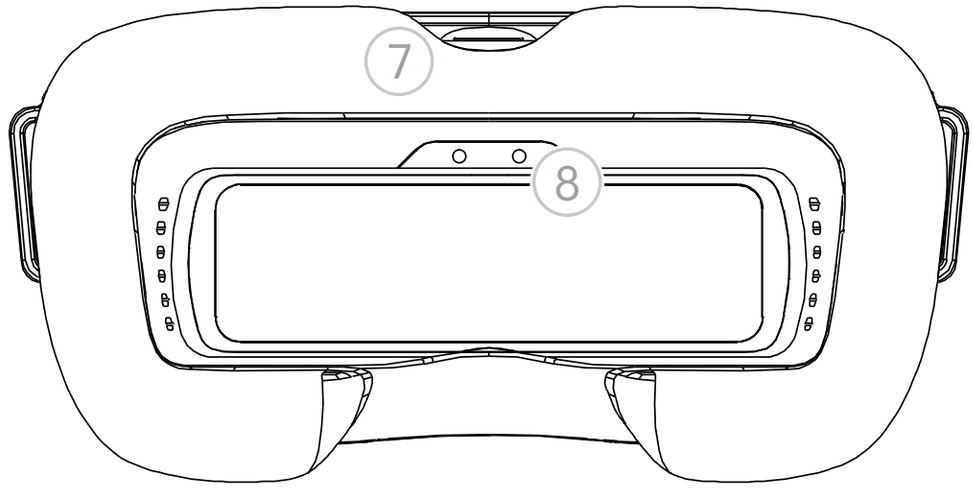


1: 内置天线
2: 对频键
（短按进入对频状态，长按8秒进入升级状态）
3: 录制键
（按下可开始/暂停录像）
4: 返回键
（按下可返回上一级菜单或当前模式）
5: 五维按键
（上下左右控制菜单选择框方向，按下为确认或取消选择）
6: 电源接口
（电压范围: 6V–25.2V，DC 5.5*2.1）
7: Micro SD卡槽
8: 镜框安装孔

# 对频

1. 连接眼镜和 VTX 天空端电源。
2. 等待设备启机后，分别按下眼镜和 VTX 天空端对频按钮，当进入配对状态时，VTX 指示灯变为红色，眼镜端发出滴... 滴... 滴...蜂鸣器提示。
3. 对频成功后，VTX 上的指示灯变为绿色常亮，眼镜蜂鸣器停止并显示图传画面。

# 升级

请到官网下载最新升级固件，Ascent_L_Gnd_X_X_X.img 对应眼镜端升级固件，拷贝到眼镜端 SD 卡中，注意请勿修改文件名。

1. 将升级文件复制到眼镜端SD 卡的根目录下，连接电源并等待设备启机

（如果有，请先删除旧固件文件）。

2. 长按眼镜端对频按钮 8 秒后蜂鸣器长响一秒后松开，等待设备自动重启后发出蜂鸣器提示音滴……滴……滴……(升级时间大约为1分钟，中途请勿断电)
3. 升级成功后，眼镜端蜂鸣器长响5秒后停止并自动重启。

# 状态指示

| 眼镜蜂鸣器状态 | |
|---|---|
| 对频状态 | 滴.... 滴.... 滴.... 滴.... |
| 升级固件 | 滴..... 滴..... 滴..... 滴—— |
| 升级失败（未检测到SD卡或固件） | 滴.. 滴.. 滴.. 滴.. |
| 启机失败（重启或重刷固件） | 滴.. 滴..... 滴.. 滴..... |

# 注意事项

1. 该产品使用较为复杂，使用者需具备基本的动手能力以及安全常识，并且需要小心使用。
2. 待机模式开启且飞行器未解锁 VTX 和眼镜发射功率受限于10mW。
3. 眼镜最多支持3个带宽为10MHz 和 20Mhz 的频道。
4. 首次使用建议将 VTX 和眼镜升级到最新固件。

# 工作频道

| Central frequency(MHz) | Channel1 | Channel2 | Channel3 |
|---|---|---|---|
| FCC | 5740 | 5770 | 5805 |
| CE/SRRC | 5740 | 5770 | 5805 |

使用本产品前，请确保您充分了解并遵守当地法律法规。使用修改或破解版本或未经许可使用业余频段的用户可能会因违反当地法律或法规而受到处罚。

# FCC 警告

本设备符合 FCC 规则第 15 部分的规定。操作须遵守以下两个条件：(1) 本设备不得造成有害干扰，(2) 本设备必须接受任何收到的干扰，包括可能导致意外操作的干扰。任何未经合规负责方明确批准的更改或修改都可能导致用户操作本设备的权限失效。

**注意：**本设备已经过测试，符合 FCC 规则第 15 部分对 B 类数字设备的限制。这些限制旨在为住宅安装提供合理的保护，防止有害干扰。本设备会产生、使用并能辐射射频能量，如果未按照说明安装和使用，可能会对无线电通信造成有害干扰。但是，不能保证在特定安装中不会发生干扰。如果本设备确实对无线电或电视接收造成有害干扰（可通过关闭和打开设备来确定），则建议用户尝试通过以下一种或多种措施来纠正干扰：

– 重新调整或重新定位接收天线。
– 增加设备与接收器之间的距离。
– 将设备连接到与接收器所连接电路不同的电路插座。
– 咨询经销商或经验丰富的无线电/电视技术人员寻求帮助。

**特定吸收率 (SAR) 信息：**

这款 Ascent Goggles 符合政府对无线电波暴露的要求。这些准则基于独立科学组织通过定期和彻底评估科学研究制定的标准。这些标准包括相当大的安全裕度，旨在确保所有人的安全，无论年龄或健康状况如何。

**FCC RF 暴露信息和声明:**

美国 (FCC) 的 SAR 限值是 1.6 W/kg，每克人体组织平均 4.0W/kg。设备类型：WN02–FPL006 (FCC ID: ) 也已针对此 SAR 限值进行了测试。在
产品认证期间，根据此标准报告的最高 SAR 值为 0.612W/kg，用于心脏和肢体时为 0.138W/kg。此设备已针对典型的随身佩戴操作进行了测试，其中 Goggles 的背面与身体保持 0mm 的距离。为了保持符合 FCC 射频暴露要求，请使用在用户身体和 Goggles 背面之间保持 0mm 距离的配件。使用的皮带夹、皮套和类似配件的组装中不应包含金属部件。使用不满足这些要求的配件可能不符合 FCC 射频暴露要求，应避免使用。

**佩戴在身上的操作:**

本设备已针对典型的随身佩戴操作进行了测试。为了符合 RF 暴露要求，用户的身体与 Goggles（包括天线）之间必须保持至少 0 毫米的间隔距离。本设备使用的第三方皮带夹、皮套和类似配件不应包含任何金属部件。不符合这些要求的随身佩戴配件可能不符合 RF 暴露要求，应避免使用。仅使用随附的或经批准的天线。

# 软件界面

## 主界面-1

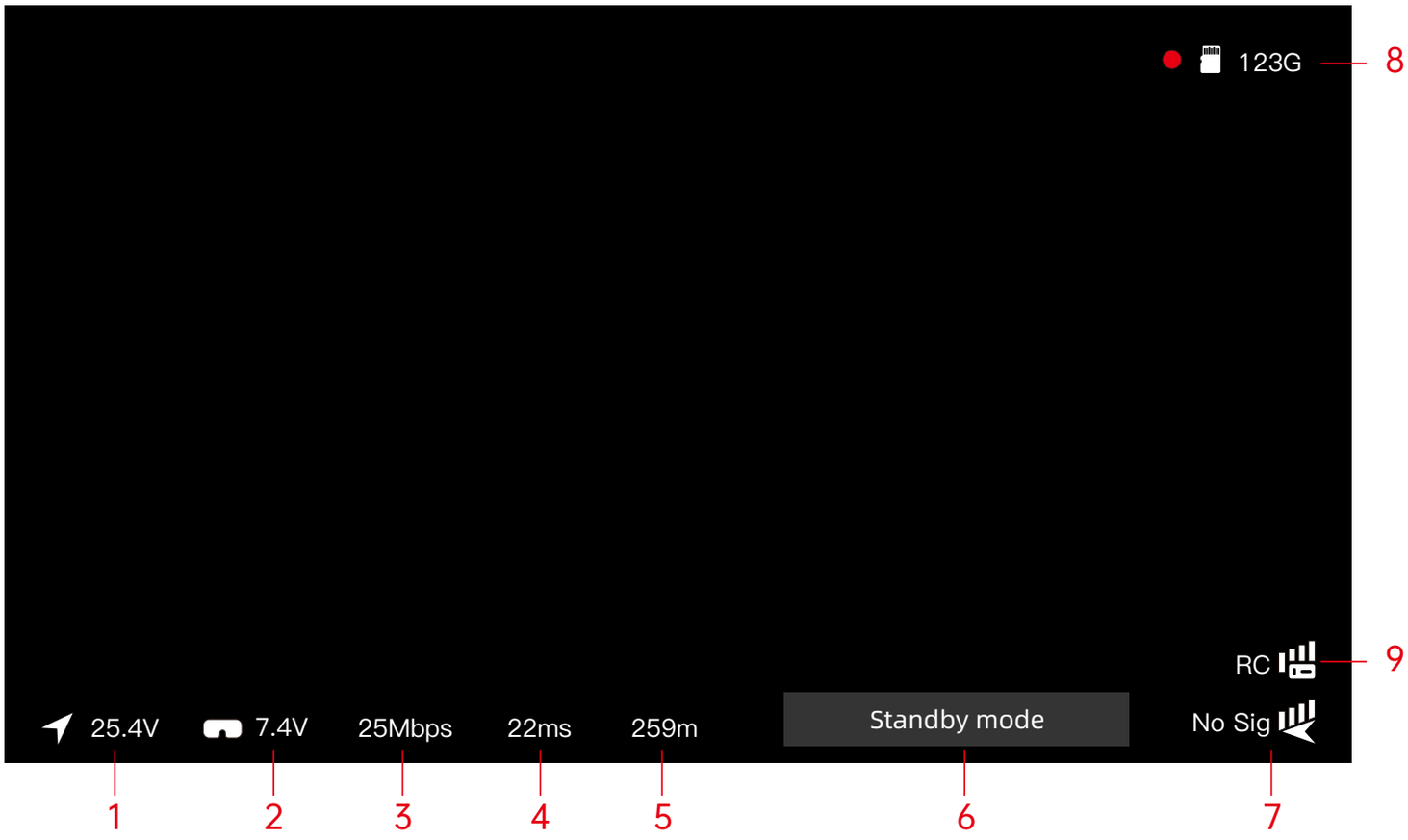


**1-天空端输入电压**
显示天空端供电电压，智能识别2、3、4、6串LiPo电芯电压，单片电芯低于3.5V红色字体报警提示。

**2-地面端输入电压：**
显示眼镜供电电压，智能识别2、3、4、6串LiPo电芯电压，单片电芯低于3.5V红色字体和蜂鸣器报警提示。

**3-实时码率**
显示实时传输码率单位Mbps，10.0M和20.0M两种宽带模式。

**4-图传延迟：**
显示从发射端相机采集图像传输至地面端的总延时。

**5-测距功能：**
依据无线传输延时计算接收端至发射端传输距离功能，信号被干扰会导致误差放大。

**6-状态提示：**
文字提示当前需注意的状态提示。

**7-当前频道：**
显示当前设置频道，信号格共5种状态，4格、3格、2格、1格、空格。

**8-地面端SD卡状态：**
显示眼镜内存卡状态及剩余容量，录像时红圈闪烁提示，不在录制状态不显示红圈，检测不到SD卡状态显示为NO SD，卡满状态显示为–。

**9-遥控器信号状态：**
信号格共5种状态，4格、3格、2格、1格、空格，当图传未检测到遥控器信号时，此图标会隐藏。

# 菜单频道-2

**1–频道：**
显示各频道的干扰情况，信号强度分为4格、3格、2格、1格、空格，信号显示空格为已被占用不可选，白色描边为选择框，按下确认键高亮显示，高亮显示为当前频道。

**2–跳频：**
开启跳频功能，眼镜将自动选择干扰较小的频道，此时不可手动切换频道。

**3–刷新：**
点击刷新可以重新搜索各个频道的干扰情况以及状态。

# 菜单设置-4

1-相机：

相机可调整内容分别为场景预设、曝光、饱和度、锐度、白平衡、画面旋转、画面比例、3D降噪。

2-显示：

显示可调整内容为 Debug、屏幕亮度、聚焦模式、自定义OSD、OSD位置、升级字体、自定义字体、取景框、取景框设置、眼睛图标。

3-录像：

录像可调整内容为 VTX 发射端分辨率、录像设备、自动启停、循环录制、格式化SD卡、格式化发射端、录像时间。

4-设备：

设备可调整内容为蜂鸣器音量、测距模式、信号丢失提示、恢复出厂设置、重置发射端默认值、设备信息、操作说明、切换模式、眼镜端录像码率、抗频闪。

5-发射功率：

发射功率默认可选择25mW、100mW功率。

6-分辨率：

分辨率可以选择720P和1080P。

7-带宽：

可选择自动、10M、20M带宽工作模式，理论上带宽越小抗干扰越好但码率较低，带宽越大抗干扰越差但码率较高。

8-帧率:

标准帧率等于60fps。

9-待机模式:

当处于待机模式时天空端和眼镜端发射功率为10dbm，退出待机模式或关闭待机模式开关才会输出当前设置的发射功率，开启待机模式时此功能需要天空端串口正确连接飞控当眼镜收到飞行器解锁信号时自动退出待机模式，如无飞控支持可选择关闭此功能。

10-语言/Language:

语言切换English/中文。

11-电池报警:

检测眼镜端低电量警报，电压过低红色字体和蜂鸣器报警提示，可选择开启或关闭。

12-偏好:

图传工作模式预设功能，根据您的偏好可以选择流畅、高画质、远距离模式。

# 菜单回放-5

1、选择框移动到OSD选项可以选择打开或关闭，打开时在播放视频界面叠加飞控OSD信息(如有)和主界面飞行信息，当选择框停留在视频列表中，长按眼镜端确认键打开多选功能，菜单框显示功能设置（删除、全选、取消），再次按下返回键退出多选模式。

2、播放界面单击中键暂停/播放，左右方向键调整快退/快进

# 规格参数

| | |
|---|---|
| 名称 | Ascent Goggles |
| 型号 | WN02-FP006 |
| 通信频率 | 5.738.5-5.806.5GHz |
| 发射功率(EIRP) | FCC:<20dBm，CE:<14dBm，SRRC:<20dBm |
| 接口 | DC5.5*2.1mm，Micro SD Card Slot |
| 传输分辨率 | 1080p60fps, 720p60fps |
| 图传码率 | 最大 25 Mbps |
| 最低延迟 | 平均32ms |
| 天线增益 | 4.9dBi |
| 天线极化 | 左旋圆极化 LHCP |
| 传输距离 | ＞4km |
| 频道 | 3 |
| 屏幕分辨率 | 1920*1080/60Hz |
| 屏幕材质 | LCD |
| 屏幕尺寸 | 4.5 Inch |
| 宽电源输入 | 6V-25.2V(2S-6S) |
| SD卡槽 | 支持256G |
| 系统 | Ascent HD system |

CADDXFPV 技术支持
email: support@caddxfpv.com